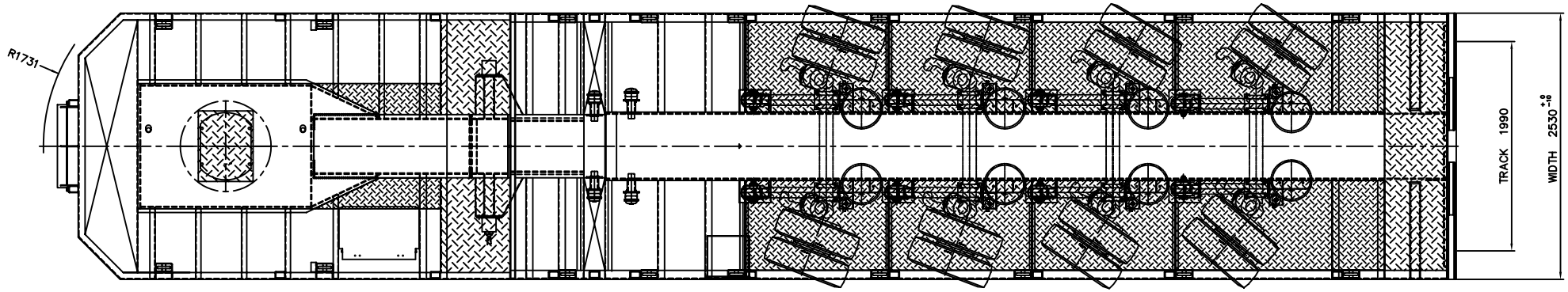

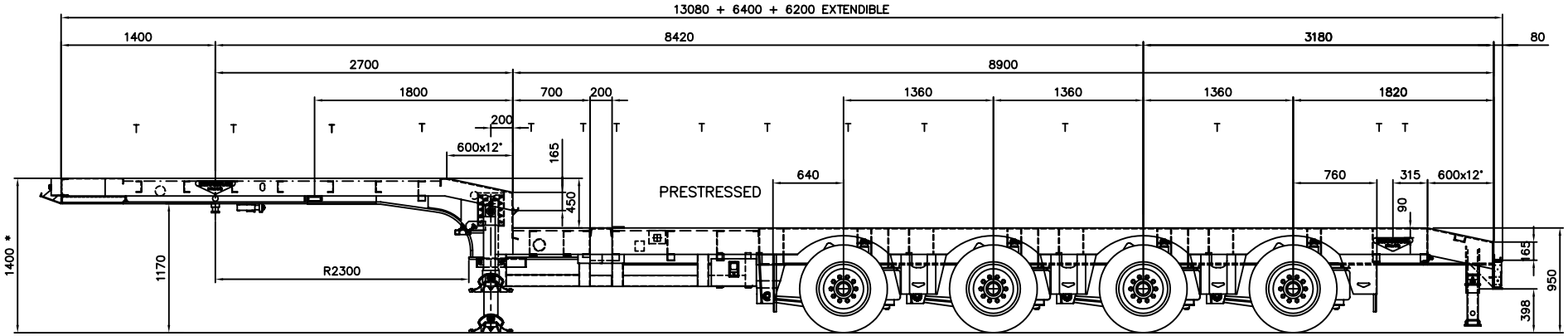

* 65mm HEAVE

Inner beam	Center beam	Suspension	GIGANT P-8063	Drawing bogie	
Extensions	Extensions	Axles	GIGANT TLRZO 69/10 12010 3020	Side rave	(F) UNP 160 closed, (R) UNP 240 closed
1000	500	Raise/lower	+ 190 / – 65 (excl. bump)	Stake pockets	96x66x6 2x 11 pcs
2000	1000	Tyres	GOODYEAR 235/75R17,5	Deck	28mm Hardwood 8/10mm Checker plate
3000	1500	Fifth wheel load	18.000 kg (techn. 22.500)	Weldings	K-13320
4000	2000	Bogie load	30.000 kg (techn. 36.000)	Drain holes	ø13
5000	2500	Landing gear	Jost Modul B	Type vehicle	4ABSD-58/2
6000	3000	Client	STAND 52	Chassis number	XNJ44H5GB08L06____ vlgs K-2585
6400	3500				
	4000				
	4500				
	5000				
	5500				
	6200				

COPYRIGHT BROSHUIS B.V.

BROSHUIS HOLLAND

BROSHUIS B.V. SPECIAL TRAILERS
INDUSTRIEWEG 22 8263 AD KAMPEN
POSTBUS 468 8260 AL KAMPEN
TELEFOON +31(0)38 3372800
TELEFAX +31(0)38 3372888
E-MAIL sales@broshuis.com

Diverse aanpassingen	3	HvU	19-06-07
Diverse aanpassingen	2	H.R.	06-12-06
Nieuwe opzet tekening	4	DB	22-01-08
Specification modification			

Drawn		Dimensions in mm	
Date	Jan 2008	Scale	1:20
Order.no.		Format	A1
Preceeded		Tolerances	ISO 2768-cL

Projection

FOUR AXLE DOUBLE EXTENDIBLE SEMI LOW LOADER

Drawing no. STAND52_G/4 Checked